Design Pressure = 1000 PSI @ 120 °F
Min. Design Temperature = 20 °F @ 1000 PSI
Hydrotest Pressure = 1100 PSI

1000 PSI
MEGA SIDE PORT

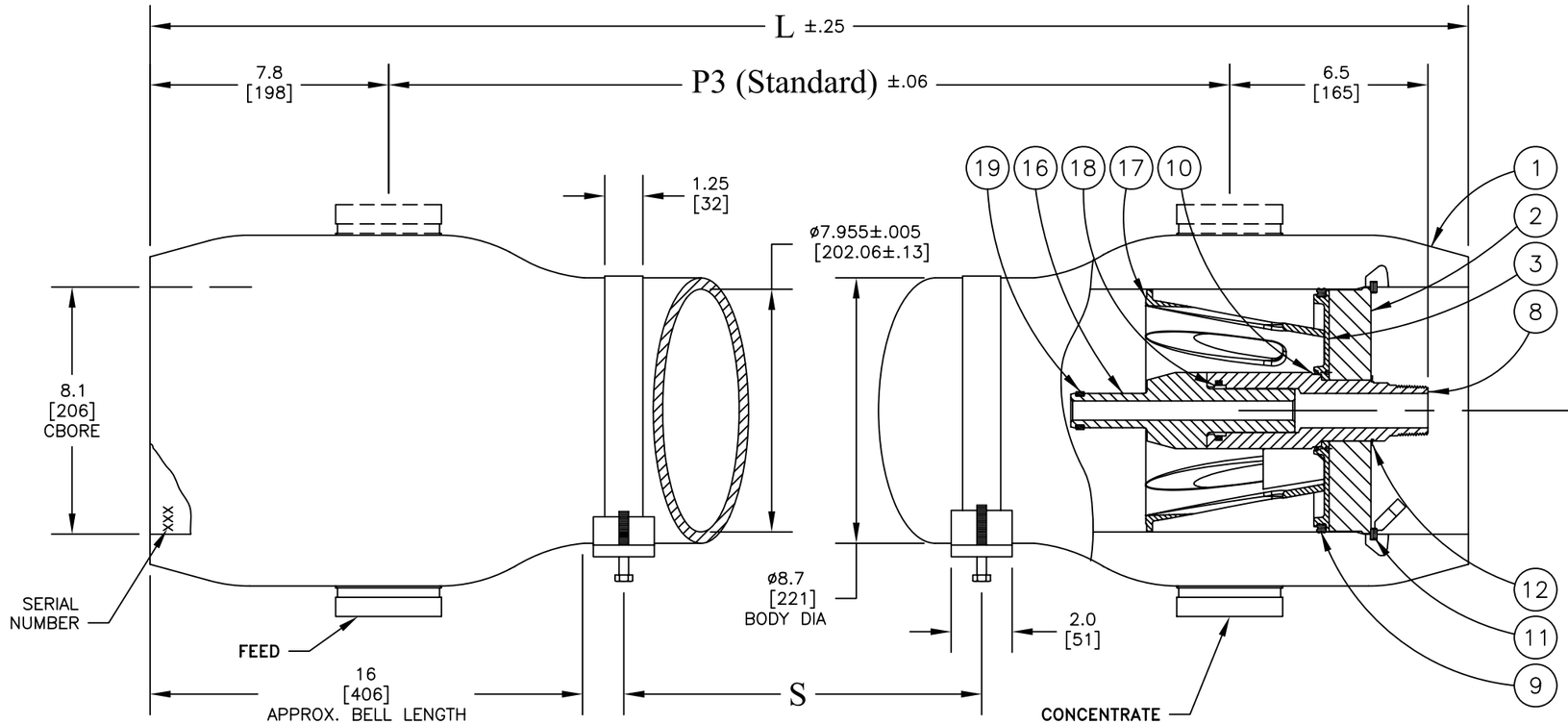

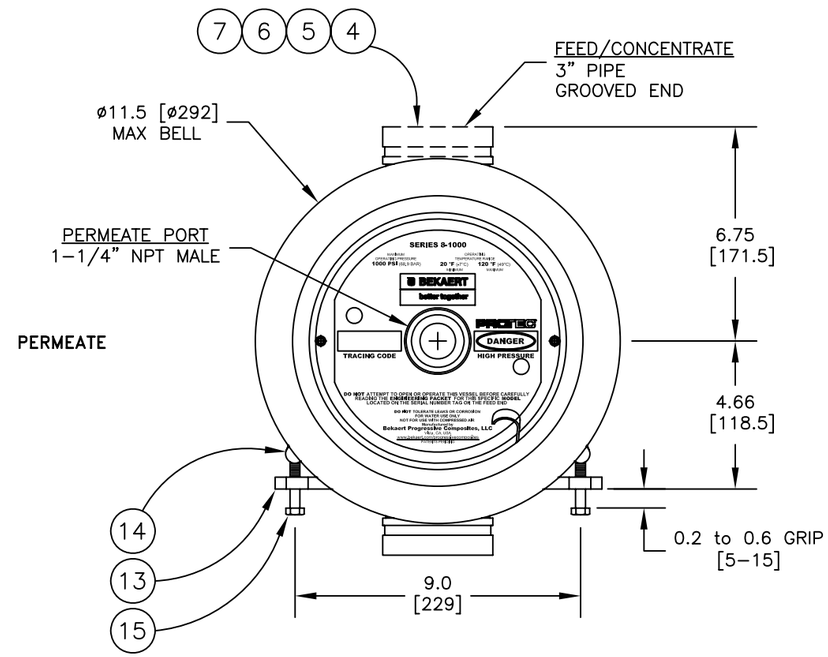

NOTE: STANDARD PARTS ARE SHOWN FOR REFERENCE ONLY
CHECK ORIGINAL ORDER FOR ORDERING SPARE PARTS

Shell Length Code	L inch (mm)	P3 Standard inch (mm)	S Span in (mm)	Empty Weight lb (kg)
-1	61.6 (1564.64)	46 (1168.40)	1 @ 28 (711.20)	133 (60)
-1.5	81.6 (2072.64)	66 (1676.40)	1 @ 42 (1066.80)	157 (71)
-2	101.6 (2580.64)	86 (2184.40)	1 @ 56 (1422.40)	180 (82)
-3	141.6 (3596.64)	126 (3200.40)	1 @ 80 (2032.00)	228 (104)
-4	181.6 (4612.64)	166 (4216.40)	2 @ 64 (1625.60)	275 (125)
-5	221.6 (5628.64)	206 (5232.40)	2 @ 78 (1981.20)	322 (146)
-6	261.6 (6644.64)	246 (6248.40)	2 @ 92 (2336.80)	370 (168)
-7	301.6 (7660.64)	286 (7264.40)	2 @ 106 (2692.40)	417 (190)
-7.5	321.6 (8168.64)	306 (7772.40)	2 @ 114 (2895.60)	441 (200)
-8	341.6 (8676.64)	326 (8280.40)	2 @ 120 (3048.00)	464 (211)

ITEM	QTY	P/N	DESCRIPTION	MATERIAL
1	1	4080213	Shell	Filament Wound, Epoxy FRP
2	2	4080034	Bearing Plate	6061-T6 Aluminum, SB-221, Anodized
3	2	4080177-2	Sealing Plate	Thermoplastic
4	2	4080214	Feed/Concentrate Port, 3", "K"	SST Super Duplex, SA-790
5	2	6121373	Retaining Ring, F/C Port, 3", "K"	Stainless Steel, 316, SA-479
6	2	6180340-N	O-Ring Seal, F/C Port, 3", "K"	Ethylene Propylene
7	2	6121343	Retaining Ring, F/C Port, 3", "K"	Stainless Steel, 316, SA-479
8	2	4080308	Permeate Port	Noryl GFN2
9	2	6100442MK	Head Seal	Ethylene Propylene
10	2	6110229-N	Permeate Port Seal	Ethylene Propylene
11	2	4080320	Retaining Ring w/ Finger Pull	Stainless Steel, 316, SA-479
12	2	6121200	Retaining Ring, Permeate Port	Stainless Steel, 316
13	2*	4080175	Support Saddle	Thermoplastic Rubber
14	2	4080137	Strap Assembly	Stainless Steel, 316
15	4	6150001	Strap Screw	Stainless Steel, 18-8
16	2	A/R	Adapter	Thermoplastic
17	1	4080165-1	Thrust Cone	PVC Thermoplastic
18	2	6110326-N	Adapter Seal	Ethylene Propylene
19	A/R	A/R	PWT Seal	Ethylene Propylene

*3 each with shell length -4 and longer

NOTES:

DIMENSIONS IN INCHES (MM APPROX.)

FOR REFERENCE ONLY, NOT FOR CONSTRUCTION UNLESS CERTIFIED

SHIMMING OF THE SADDLES MAY BE REQUIRED

CENTER VESSEL ON 2 OR 3 SUPPORTS AT SPAN(S) "S".

INCORRECT MANIFOLDING WILL CAUSE SEVERE LOCAL STRESS AROUND PORT AND MAY RESULT IN LEAKS AND PREMATURE FAILURE. TAKE EVERY PRECAUTION LISTED IN THE ENGINEERING PACKET OR USERS MANUAL.

INTERNAL PERMEATE PRESSURE MUST NOT EXCEED 125 PSI.

ASME SECTION X, 2007-A09
RP CODE STAMP OPTIONAL

SPECIFICATIONS SUBJECT TO CHANGE WITHOUT NOTICE

PROTEC™
BEKAERT PROGRESSIVE COMPOSITES, LLC
Vista, California, U.S.A.

ENGR EB 06/08/07
QLTY
MRKT

PRO 8-1000-MSP

ECO	REVISED	DRAWING	REV
09279	10/2/09	101022	L